LED Universal Light EXT

6192017

TRULY GREEN SOLUTIONS

SAFETY GUIDELINES

READ CAREFULLY BEFORE INSTALLING.
RETAIN THESE INSTRUCTIONS FOR FUTURE REFERENCE.

- **WARNING - Risk of electric shock.** Turn off electrical power at fuse or circuit breaker box.
- **WARNING -** This product must be installed in accordance with applicable manufacturer installation instructions.
- Installation must be performed only by a licensed electrician in accordancewith the National Electrical Code (NEC) and local electrical codes. Proper grounding is required for safety.
- **WARNING -** Do not disassemble lamp. The product has no serviceable parts inside.
- **WARNING -** To prevent wiring damage or abrasion, do not expose wiring to shape edges of housing or other sharp surfaces.
- **WARNING -** This device is not intended for use with emergency exit.
- **CAUTION -** If the lamp or luminaire exhibits undesirable operation (buzzing, flickering, etc.), immediately turn off power, remove the lamp from luminaire, and contact the manufacturer.
- Designed for use with 100-277V 50-60Hz.
- Operating Temperature: -30º~60ºC (-20º~140ºF)

TGS cannot and will not be liable for any modifications or results of modifications to electrical devices or fixtures. These instructions are provided as a reference. By using the included instructions, you are solely responsible for following all applicable electrical safety procedures, codes, methods, and materials. If you are unsure about any electrical modification or installation, please consult a licensed electrician or electrical contractor in your area.

Installation Instructions:

I. Unpack and carefully examine the product.
II. Report any damage and save all packing materials if any parts were damage during shipping.
III. Do not attempt to use this lamp if it is damaged.

STEP 1: Turn off the power at the circuit breaker and AC switch before attemping work on the fixture.

STEP 2: Bypass the ballast, capacitor, and ignitor, where applicable. (Figure 1)

STEP 3: Connect the Live (BROWN), Neutral (BLUE) and Ground (Green/ Yellow) directly to the external driver input wires and connect the RED V(+) and Black V(-) output wires to the lamp holder. (Figure 2)

STEP 4: Screw the TGS Universal Light™ EXT lamp into the fixture. Ensure that the bulb is seated firmly.

STEP 5: Turn on the circuit breaker and AC switch.

STEP 6: Turn on the ON / OFF Switch to verify proper operation.

Figure 2

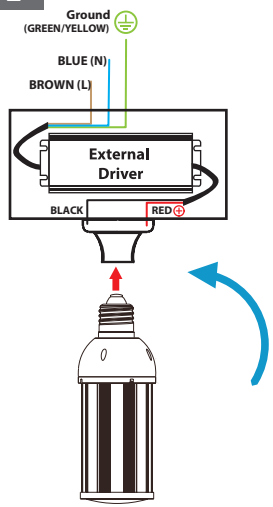

Figure 1 **Wiring Diagram**

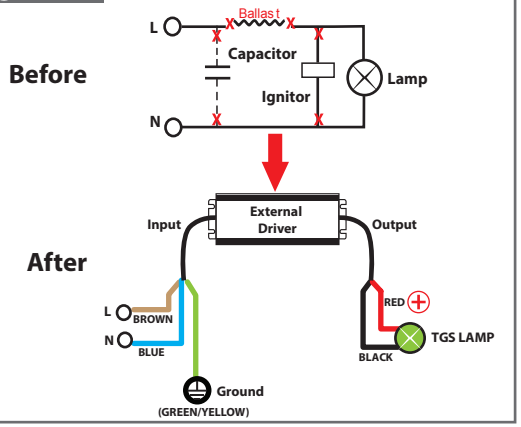

Base Orientation

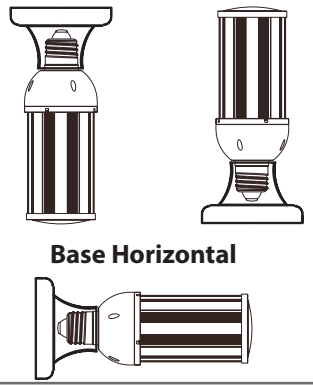

Specifications and dimensions subject to change without notice.
All images are copyright Truly Green Solutions, LLC and may be only be used with permission.
www.trulygreensolutions.com I Tel: 818-206-4404 I Fax: 866-577-5302 I info@trulygreensolutions.com