⚠ WARNING

PLEASE READ ALL INSTRUCTIONS BEFORE ATTEMPTING INSTALLATION

— To prevent personal injury or product damage only licensed electricians should install.

— To avoid electric shock or component damage disconnect power before attempting installation or servicing.

— This product must be installed in accordance with the national electric code (NEC) and all applicable federal, state and local electric codes and safety standards.

— Disconnect product and allow cooling prior to servicing.

— Any alteration or modification of this product is expressly forbidden as it may cause serious personal injury, death, property damage and/or product malfunction.

— To prevent product malfunction and/or electrical shock this product must be properly grounded.

— This luminaire is designed to operate in ambient temperatures ranging from -40°c to 45°c and to be horizontally mounted with the LEDs facing down.

Installation

1. Surface Mounted with J-box

1.loosen and remove the side M4 screws which used to fix the mounting plate.

Figure 1

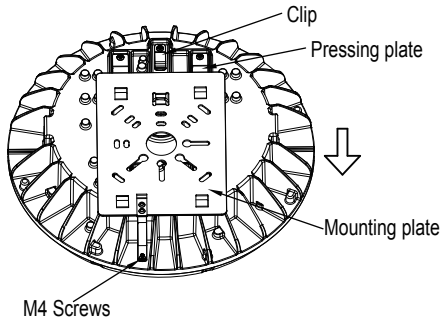

2.Fix the mounting plate to the ceiling with the screws.

Figure 2

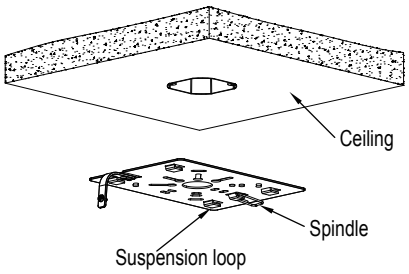

3.Connect the clip on the fixture to the spindle of the mounting plate to make sure the fixture will not slip and fall.connect the line voltage to the wires coming out from the fixture following the wiring diagram.Push the pressing plate into the suspension loop on the mounting plate.

Figure 3

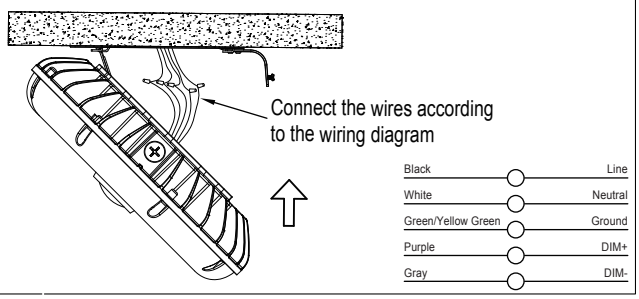

4.lock the M4 screws to complete the intallation.

Figure 4

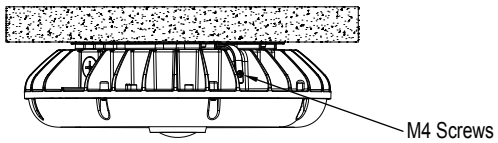

2. Pendent with 3/4 inch Conduit
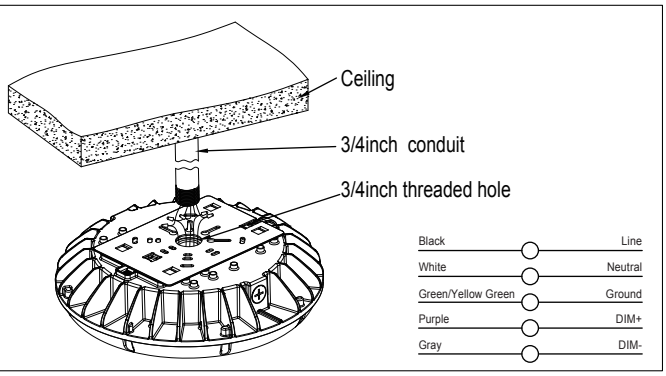
1. Connect the line voltage to the wires coming out from the fixture following the wiring diagram.
2. Screw the fixture to the 3/4 inch conduit to complete the installation.