Eco™ AIR

Installation Instructions

HARDWARE INCLUDED

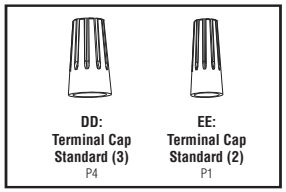

TOOLS REQUIRED

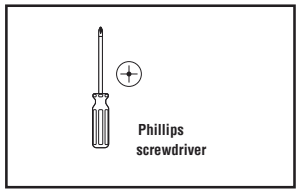

TROUBLE SHOOTING

PROBLEM	POSSIBLE CAUSE	SOLUTION
Light will not come on.	A. Light switch is turned off. B. Fuse is blown or circuit breaker is turned off. C. Incorrect circuit wiring.	A. Turn light switch on. B. Replace fuse or turn circuit breaker on. C. Verify that fixture is wired properly.

FCC WARNING:

WARNING: Changes or modifications to this unit not expressly approved by the party responsible for compliance could void the user authority to operate the equipment.

****

NOTES: This equipment has been tested and found to comply with the limits for a Class B digital device, pursuant to Part 15 of the FCC Rules. These limits are designed to provide reasonable protection against harmful interference in a residential installation. This equipment generates, uses and can radiate radio frequency energy and, if not installed and used in accordance with the instructions, may cause harmful interference to radio communications.

However, there is no guarantee that interference will not occur in a particular installation. If this equipment does cause harmful interference to radio or television reception, which can be determined by turning the equipment off and on, the user is encouraged to try to correct the interference by one or more of the following measures:

Reorient or relocate the receiving antenna.
Increase the separation between the equipment and receiver.
Connect the equipment into an outlet on a circuit different from that to which the receiver is connected.
Consult the dealer or an experienced radio/TV technician for help.

NOTE:
- Building supply wires must be min 90°C.
- Fixture wiring compartment rated for 2in/2out #12AWG only.

SAFETY INFORMATION

WARNING: Read all safety precautions and installation instructions carefully before installing or servicing this fixture. Failure to comply with these instructions could result in a potentially fatal electric shock, fire, and/or property damage.

To reduce the risk of electrical shock or other personal injury which could be hazardous or fatal, ensure the power is turned OFF at the fuse or breaker box before making any electrical connections or removing the old fixture.
Changes or modifications not expressly approved by the party responsible for compliance could void the user's authority to operate the equipment.
Must be connected to 120 volt, 60 Hz power source.
Fixture may be directly mounted to the ceiling.
Suitable for wall mount.
NOT suitable for ground locations. Minimum of 4 feet or higher.
Fixture should be installed by a qualified electrician or person experienced with household wiring. The electrical system, and method of electrical connection of the fixture, must be in accordance with the National Electrical Code and local building codes.

NOT INTENDED FOR USE WITH EMERGENCY EXITS
NOT SUITABLE FOR WET LOCATIONS
CONSULT A QUALIFIED ELECTRICIAN TO ENSURE CORRECT BRANCH CIRCUIT CONDUCTOR.
MINIMUM 90 SUPPLY CONDUCTORS

PRE-INSTALLATION

PLANNING INSTALLATION

Turn off the electrical power at the fuse or circuit breaker box before installing or servicing any part of this fixture.
If replacing a fixture, remove existing fixture and make a sketch of wiring configuration (by color) or mark wires with masking tape for identification.
Remove panel light from carton and check that all parts are included. Be careful not to misplace any of the screws or parts needed for installing the fixture.

INSTALLATION

CAUTION: Before beginning installation turn off the circuit breaker and light switch.

RECESSED MOUNT / T-GRID INSTALLATION

1. **Remove the ceiling tile at an appropriate location where the product is to be installed, and raise the product above the bar.**

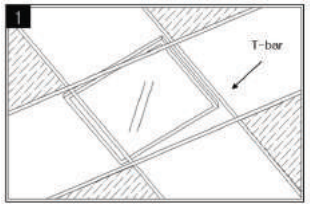

2. **Place one end of the product on the T-bar. To secure the luminaire (fixture) position in ceiling,squeeze tabs into T-bars to lock luminaire (fixture).**

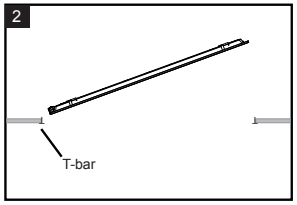

3. **With power turned off at the breaker, connect power leads to driver according to wiring diagram.**

4. **Use the protective brackets for safety.**

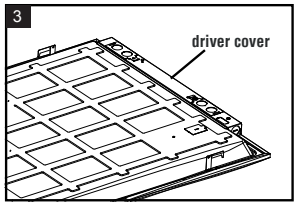

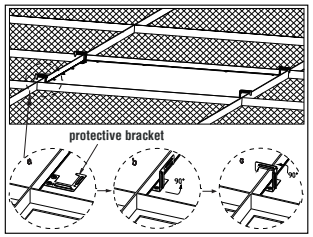

Ceiling Mounting (Mounting kit sold separately)

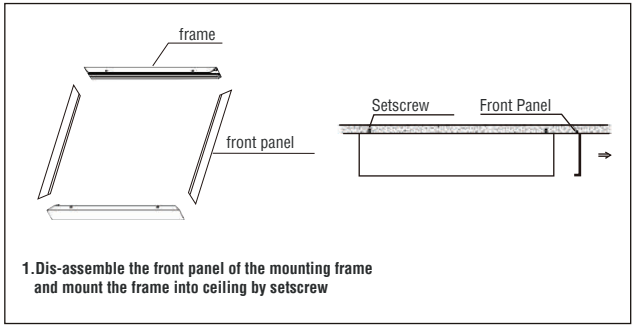

1.Dis-assemble the front panel of the mounting frame and mount the frame into ceiling by setscrew

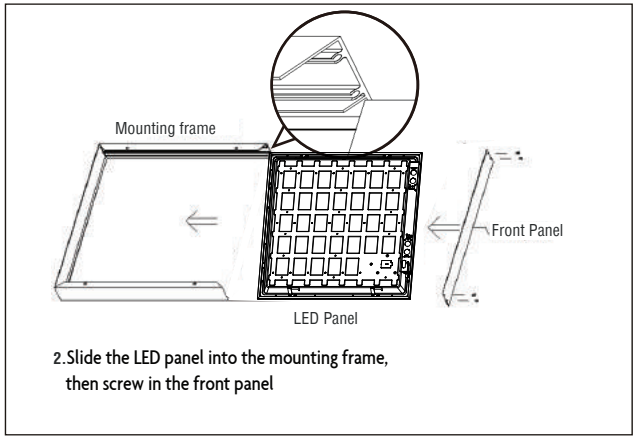

2.Slide the LED panel into the mounting frame, then screw in the front panel

Refer to Figure 6 to properly wire panel light.
Recommended: Use electrical tape to cover wire nuts.

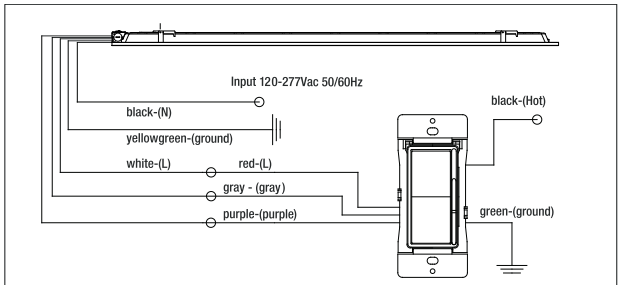

Figure 6

CAUTION:
The branch circuit connected to the lamp power cord must not be larger than 14AWG.